1.0 GENERAL NOTES
- 1.1 ALL METRIC DIMENSIONS ARE IN BRACKETS [X. X]
- 1.2 FOR PATENT INFO: https://www.cs-pat.com

2.0 DESIGN NOTES
- 2.1 ANY HAZARDS OR OBSTRUCTIONS TO THE CLIMBING FACILITY AND SAFETY CLIMB MUST BE IDENTIFIED PRIOR TO INSTALLING THE APPURTENANCE. ADDITIONAL PRODUCTS MAY BE REQUIRED TO MAINTAIN THE INTEGRITY OF THE SAFETY CLIMB. DURING INSTALLATION, TEMPORARY AND/OR PERMANENT PRECAUTIONARY MEASURES SHOULD BE TAKEN TO PRESERVE THE CLIMBING FACILITY AND/OR SAFETY CLIMB.
- 2.2 FITS MONOPOLES 15" TO 50" OD.

3.0 MANUFACTURING/SPECIAL REQUIREMENTS
- 3.1 TIGHTEN ALL BOLTS SECURING FLAT PLATES BY THE TURN-OF-NUT METHOD. TIGHTEN ALL U-BOLTS USING TURN-OF-NUT METHOD WITH ATTENTION TO LEAVE EQUAL DISTANCE AND EQUAL FORCE ON EACH LEG OF THE U-BOLT.

4.0 TEST

5.0 PACKAGING
- 5.1 PACKAGING SHALL MEET COMMSCOPE REQUIREMENTS PER DOCUMENT IS-PL-3005.
- 5.2 PRINTED DOCUMENT TO BE PLACED INSIDE POLYBAG AND THEN IN SHIPPING CONTAINER.
- 5.3 EXTRA HARDWARE MAY BE SUPPLIED, BAGGED AND SHIPPED.

| REVISIONS | | | |
|---|---|---|---|
| REV. | DESCRIPTION | DATE | APPROVED |
| A | INITIAL RELEASE | JL1183 07MAY24 | CB1094 40194988CMO |
| B | V-ARM SFG2292-00 (ITEM 3) WAS SFG2278; SHEET4: ADDED V-ARM DETAIL VIEW | JL1183 12JUL24 | CB1094 40200155CMO |

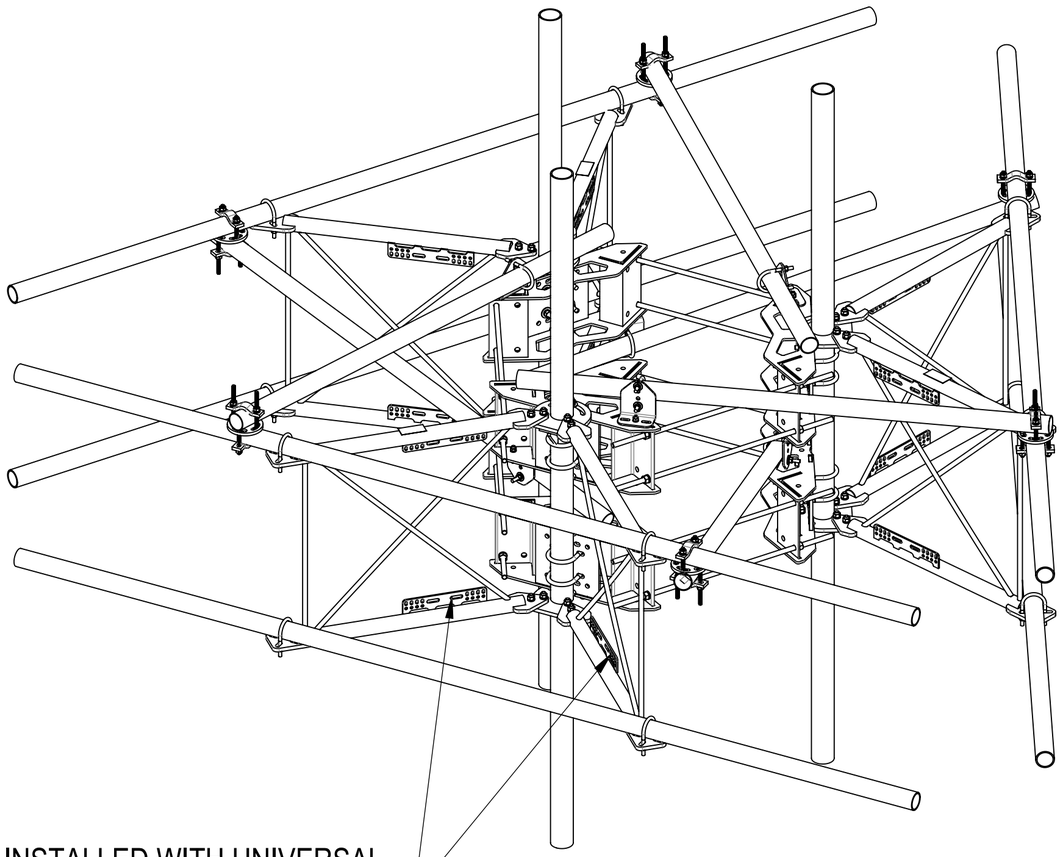

SHOULD BE INSTALLED WITH UNIVERSAL INTERFACE PLATES FACING OUTWARDS

COMMSCOPE, INC. OF NORTH CAROLINA

TOLERANCES
0 PLACE X[.X] ± 0.25[6.3]
1 PLACE .X[.X] ± 0.12[3.0]
2 PLACE .XX[.X] ± 0.06[1.5]
ANGLES ± 2°

SAP MATERIAL MASTER: MCG22RHDX-13MB

FINISH

MATERIAL

UNLESS OTHERWISE SPECIFIED DIMENSIONS ARE IN INCHES INTERPRET PER ANSI Y 14.5M-1994

| | NAME | DATE |
|---|---|---|
| CE | JL1183 | 07MAY24 |
| RW | JL1183 | 07/15/2024 |
| | | |
| AD | CB1094 | 07/18/2024 |
| RE | YMENG | 08/05/2024 |

ECN 40200155CMO

TITLE: MP,SF,13'FP,NOAP

SCALE: 1:20

DOCUMENT NO.: MCG22RHDX-13MB

| | | |
|---|---|---|
| DENSITY | | lbs/in³ |
| MASS | 1756.27 | lbs |
| VOLUME | 7969.46 | in³ |
| SURFACE AREA | 63224.46 | in² |
| HEIGHT | 120" | |
| LENGTH | 156" | |
| WIDTH | 84" | |

SIZE: C

Auth Group: INSL

| MODEL | | | DRAWING | | |
|---|---|---|---|---|---|
| VERSION | STATUS | REVISION | VERSION | STATUS | REVISION |
| 01 | RE | B | 01 | RE | B |

SHEET 1 OF 4

© 2024 CommScope, Inc. Confidential

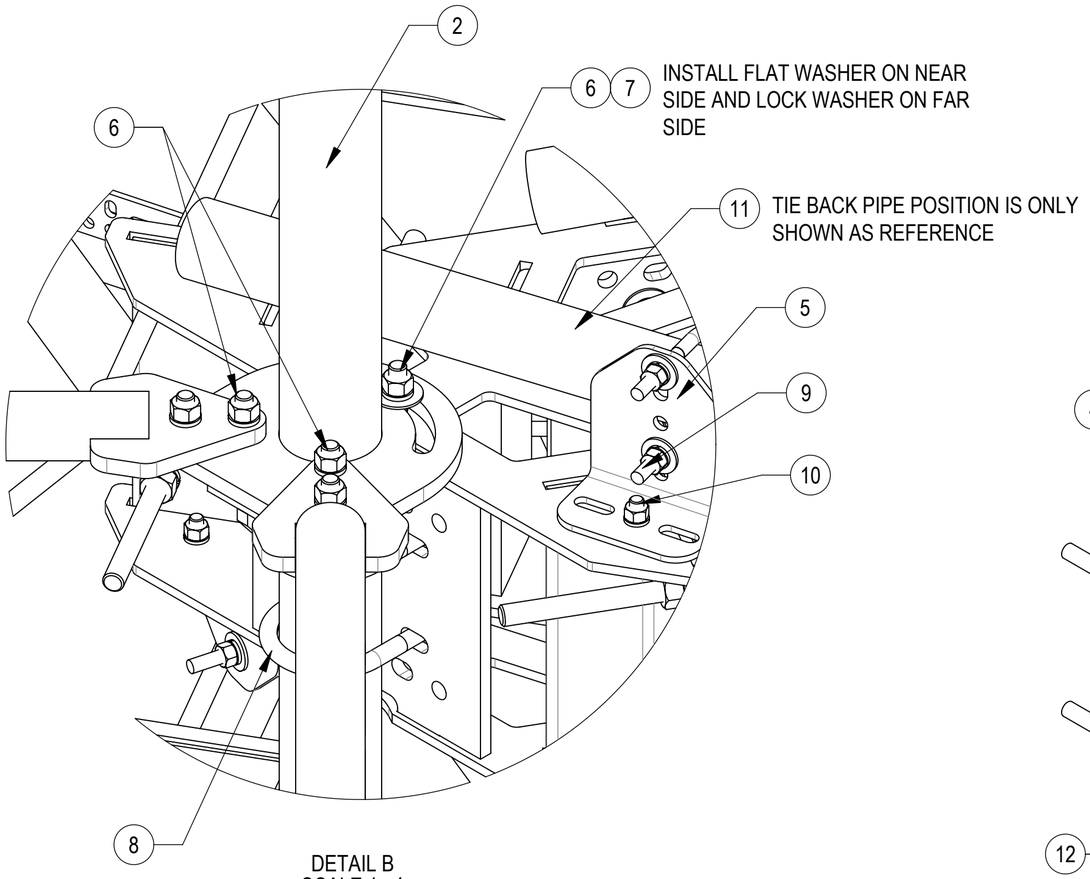


DETAIL B
SCALE 1 : 4

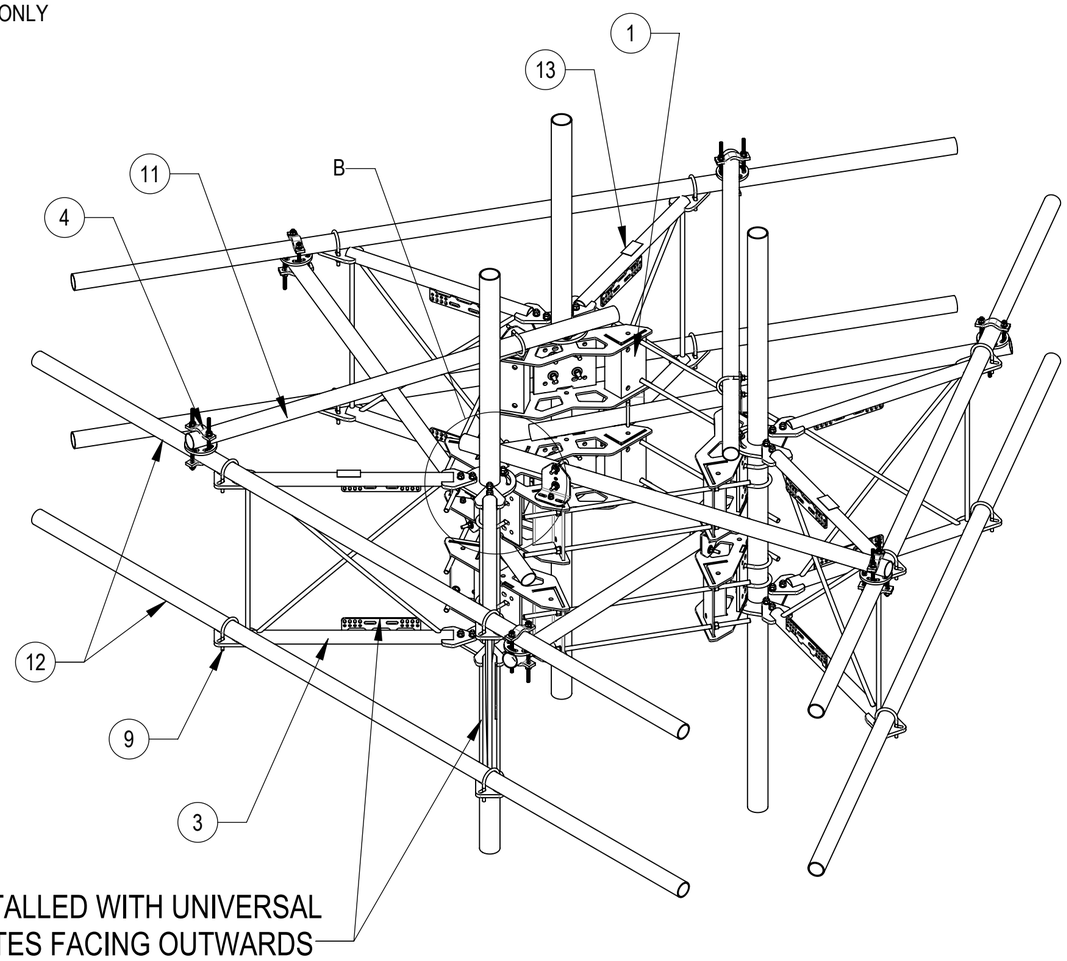


TOP

BOTTOM

COMPONENT PART NUMBERS PROVIDED FOR ASSEMBLY PURPOSES;
INDIVIDUAL COMPONENTS MAY BE SHIPPED AS PARTS WITHIN AN INCLUDED KIT.

| ITEM | PART NO. | DESCRIPTION | QTY. | WEIGHT | NOTE NO. |
|---|---|---|---|---|---|
| 1 | MC-RM1550-3 | 15" - 50" OD RINGMOUNT | 2 | 229.90 LBS | |
| 2 | SFG2204 | WELDMENT, BACK VERTICAL ARM MOUNT | 3 | 36.96 LBS | |
| 3 | SFG2292-00 | WELDMENT, V-ARM, SECTOR FRAME 22 | 6 | 49.69 LBS | |
| 4 | XP-R | CROSSOVER PLATE, ROUND, UP TO 3.5" OD | 6 | 6.20 LBS | |
| 5 | XAU01 | ANGLE, CROSSOVER, 1.9-3.5" X 1.9-3.5" OD | 6 | 2.98 LBS | |
| 6 | GB-05225 | 5/8" X 2-1/4" GALV BOLT KIT | 30 | 0.28 LBS | |
| 7 | GWF-05 | 5/8" GALV FLAT WASHER, 1.7OD | 6 | 0.06 LBS | |
| 8 | GUB-53560 | 5/8" X 3-5/8" X 6" GALV U-BOLT | 12 | 1.30 LBS | |
| 9 | GUB-4352 | 1/2" X 3" X 5-1/4" GALV U-BOLT | 18 | 0.71 LBS | |
| 10 | GB-04145 | 1/2" X 1-1/2" GALV BOLT KIT | 6 | 0.13 LBS | |
| 11 | MT546084120 | 2.88" OD X 84" LONG PIPE | 6 | 24.81 LBS | |
| 12 | MT546156 | 2.875" O.D. X 156" PIPE | 6 | 75.58 LBS | |
| 13 | SFG2295 | LABEL, SFG22RHDX | 3 | 0.04 LBS | |

B

## ALLOWABLE TIEBACK ANGLE

±15 DEGREES VERTICAL
±25 DEGREES HORIZONTAL

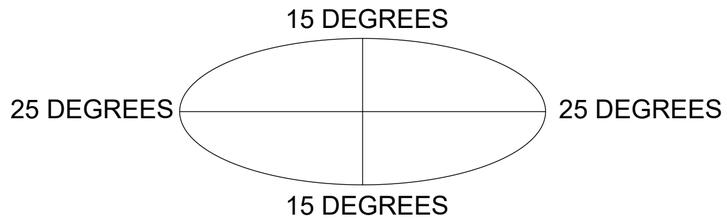


© 2024 CommScope, Inc. Confidential

COMMSCOPE, INC. OF NORTH CAROLINA

TITLE
MP,SF,13'FP,NOAP

| SIZE | SCALE | DOCUMENT NO. |
|---|---|---|
| C | 1:20 | MCG22RHDX-13MB |

| DRAWING | | | SHEET |
|---|---|---|---|
| VERSION | STATUS | REVISION | |
| 01 | RE | B | 2 OF 4 |

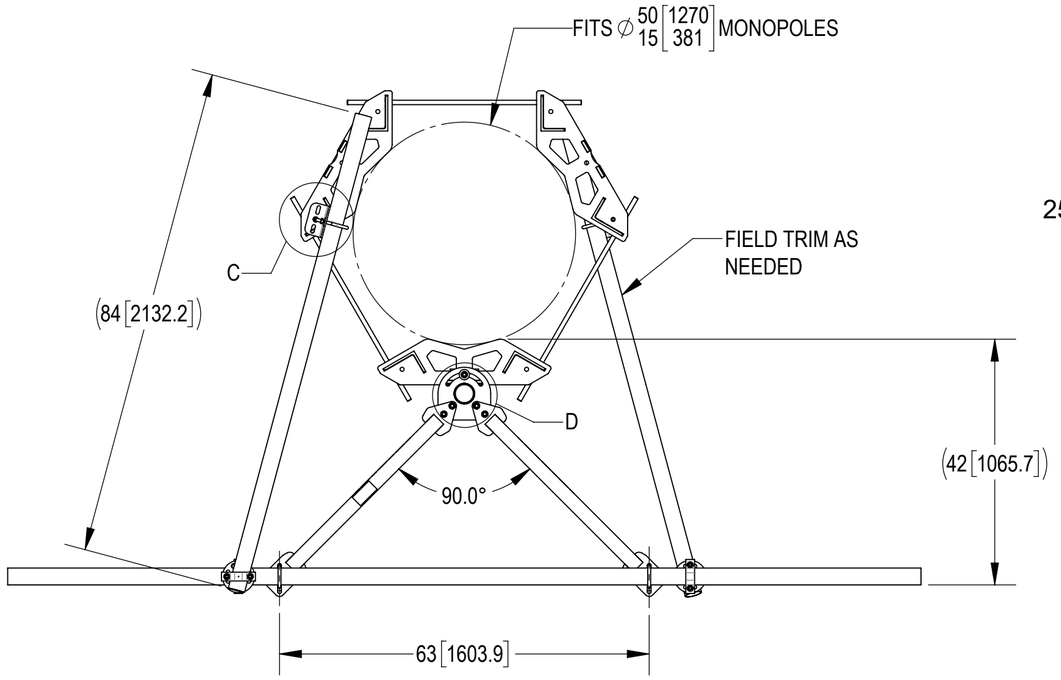


## ALLOWABLE TIEBACK ANGLE

±15 DEGREES VERTICAL
±25 DEGREES HORIZONTAL

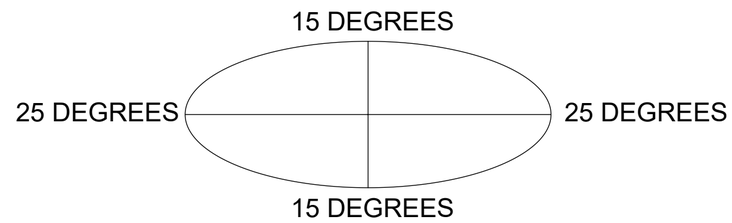


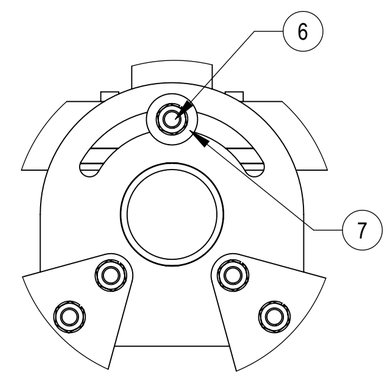


DETAIL D
SCALE 1 : 4

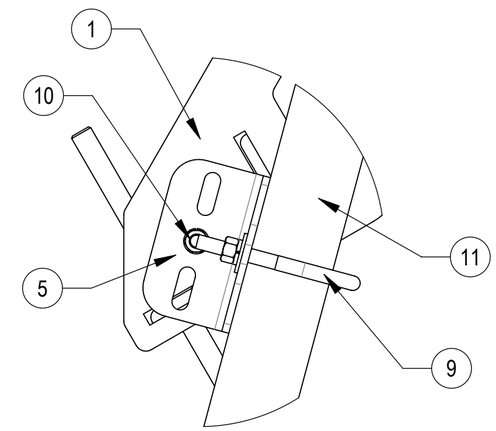


DETAIL C
SCALE 1 : 4

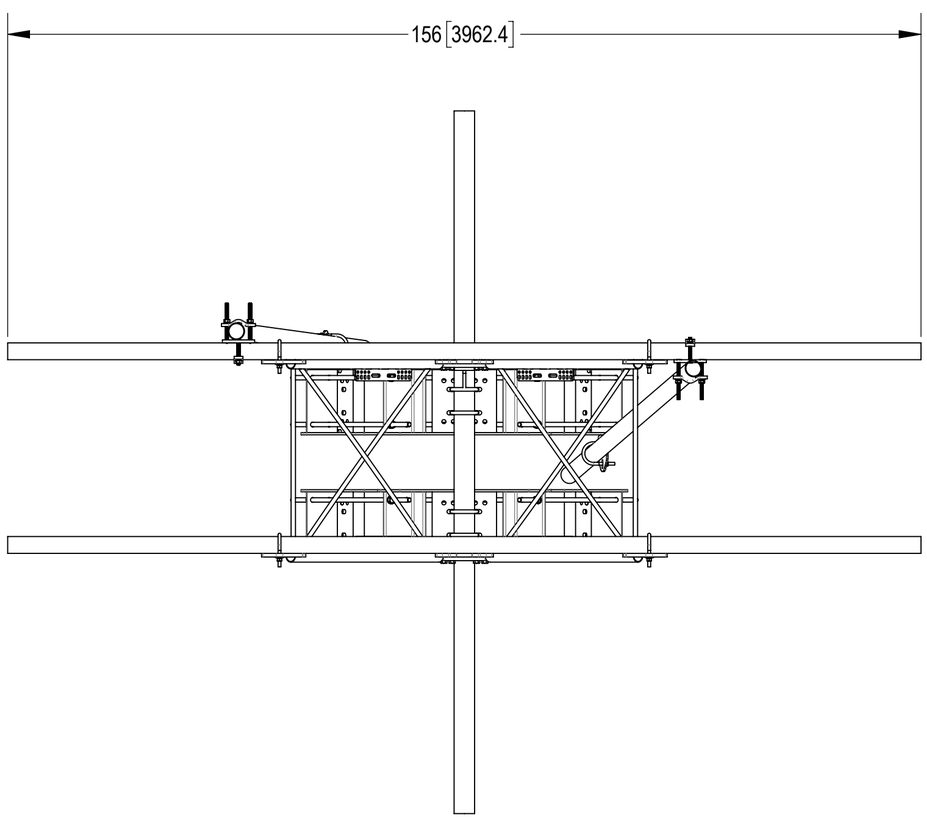


TOP

BOTTOM

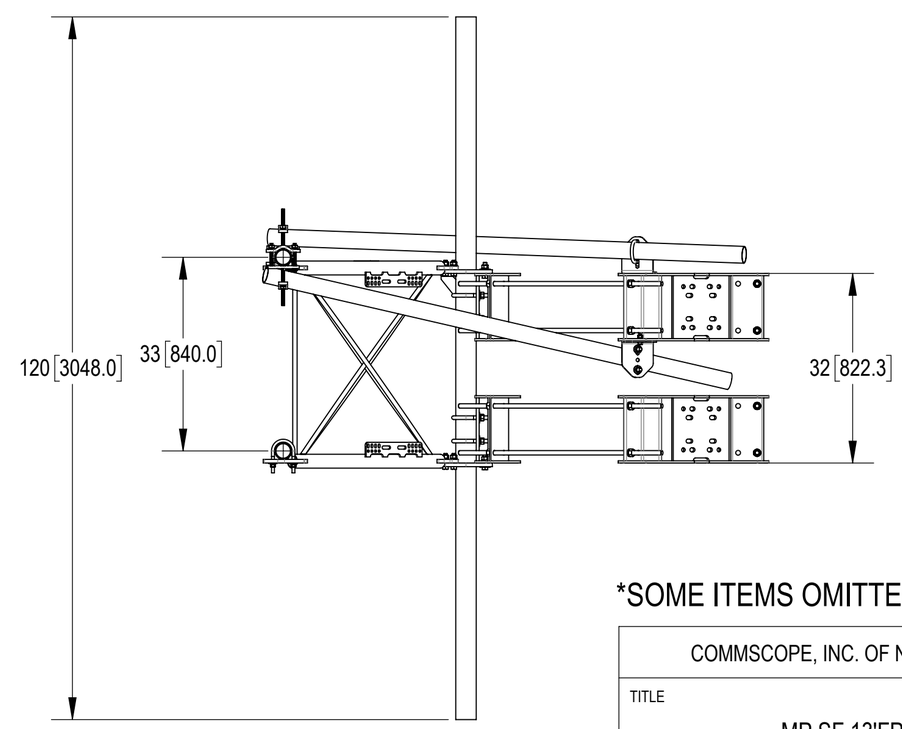


*SOME ITEMS OMITTED FOR CLARITY*

© 2024 CommScope, Inc. Confidential

| | | | | |
|---|---|---|---|---|
| COMMSCOPE, INC. OF NORTH CAROLINA | | | | |
| TITLE: MP,SF,13'FP,NOAP | | | | |
| SIZE: C | SCALE: 1:20 | DOCUMENT NO.: MCG22RHDX-13MB | | |
| | | DRAWING | | SHEET |
| | | VERSION: 01 | STATUS: RE | REVISION: B | 3 OF 4 |

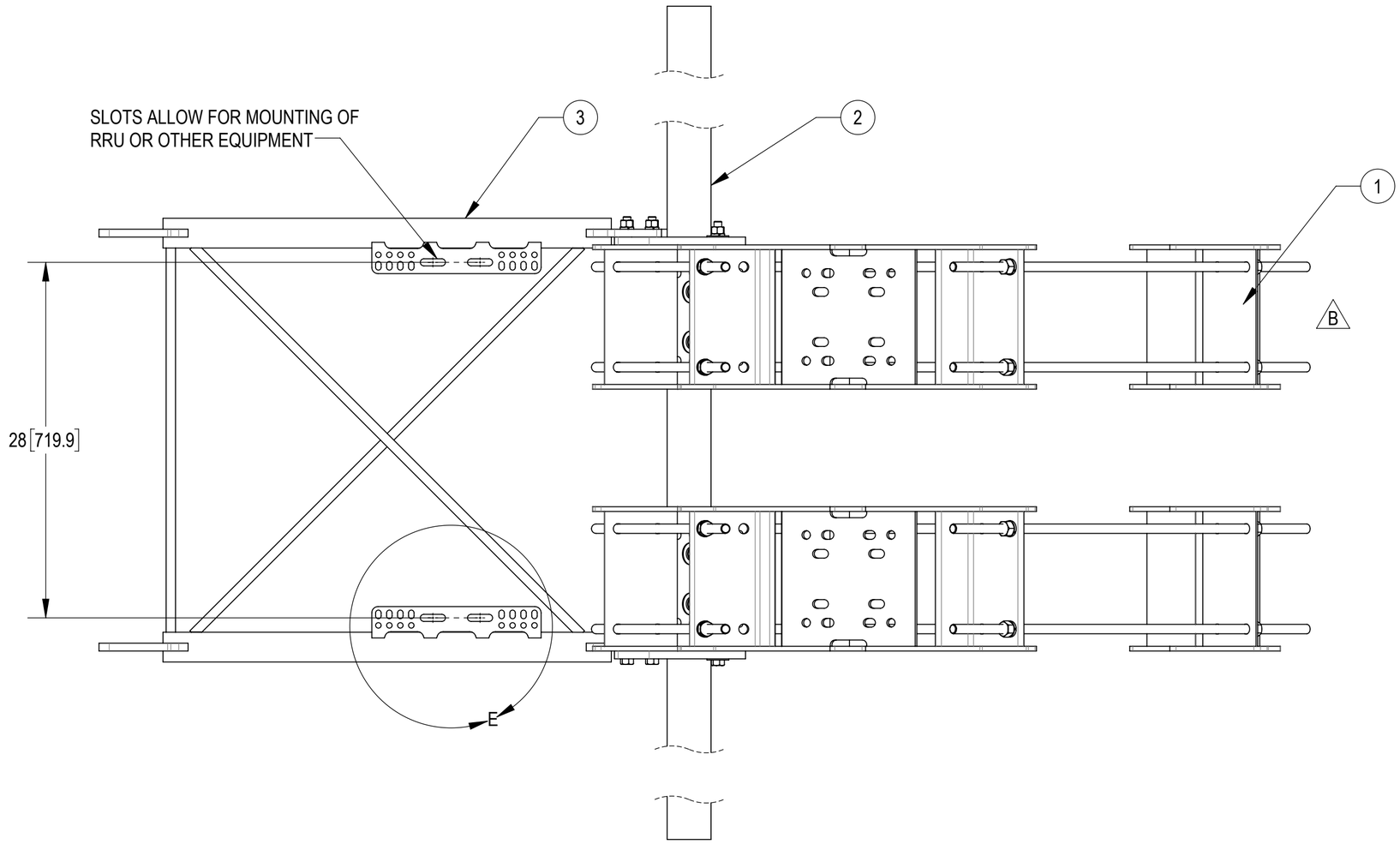


SIDE VIEW

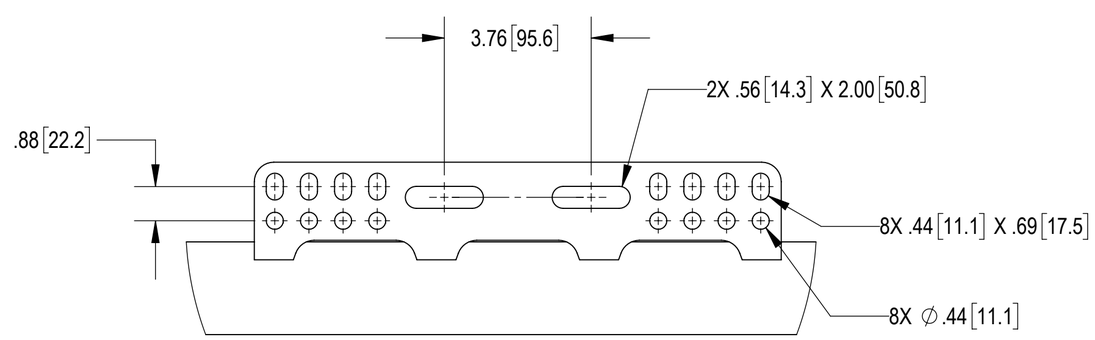


DETAIL E
SCALE 1 : 3
2 PLACES

*SOME ITEMS OMITTED FOR CLARITY*

| | | | |
|---|---|---|---|
| COMMSCOPE, INC. OF NORTH CAROLINA | | | |
| TITLE MP,SF,13'FP,NOAP | | | |
| SIZE C | SCALE 1:18 | DOCUMENT NO. MCG22RHDX-13MB | |
| | | DRAWING | SHEET |
| | | VERSION 01 / STATUS RE / REVISION B | 4 OF 4 |

© 2024 CommScope, Inc. Confidential