1.0 GENERAL NOTES
1.1 ALL METRIC DIMENSIONS ARE IN BRACKETS [X.X]
1.2 FEATURES CRITICAL TO QUALITY ARE INDICATED IN ROUNDED BOX (X.X)
2.0 DESIGN NOTES
3.0 MANUFACTURING/SPECIAL REQUIREMENTS
3.1 TIGHTEN ALL BOLTS SECURING FLAT PLATES BY THE TURN-OF-NUT METHOD.
4.0 TEST
5.0 PACKAGING
5.1 PACKAGING MUST BE AGREED TO IN WRITING BY ANDREW PRIOR TO MASS-PRODUCTION APPROVAL.
5.2 PARTS ARE TO BE PACKAGING IN A MANNER OT PREVENT DAMAGE DURING SHIPMENT & STORAGE. (B)
5.3 PACKAGING TO ADHERE TO ALL ANDREW, LOCAL & FOREIGN (WHERE APPLICABLE) SHIPPING REQUIREMENTS.
5.4 PACKAGING & PARTS TO BE FREE OF ALL CONTAMINANTS INCLUDING PAPER FROM BOX, DIRT, DUST, OILS, MOLD RELEASE, DETERGENT AND ALL OTHER FOREIGN MATERIALS.

REVISIONS			
REV.	DESCRIPTION	DATE	APPROVED
A	INITIAL RELEASE	JL1183 14JUN24	JX1030 40196238CMO
B	UPDATED VIEWS FOR PGCS-1000(ITEM 1), PGCS-5000(ITEM 6), PGCS-7000(ITEM 7), PGCS-8000(ITEM 8) CHANGES; UPDATED TO ANDREW LOGE	JL1183 10JUN25	JX1030 50103287AMO

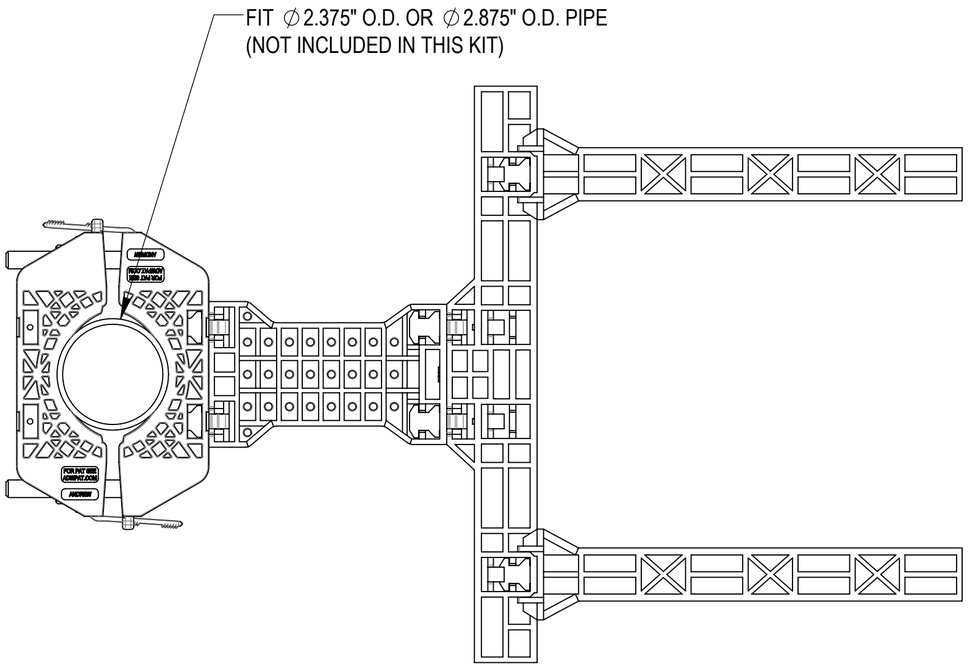

ASSEMBLY TOP VIEW

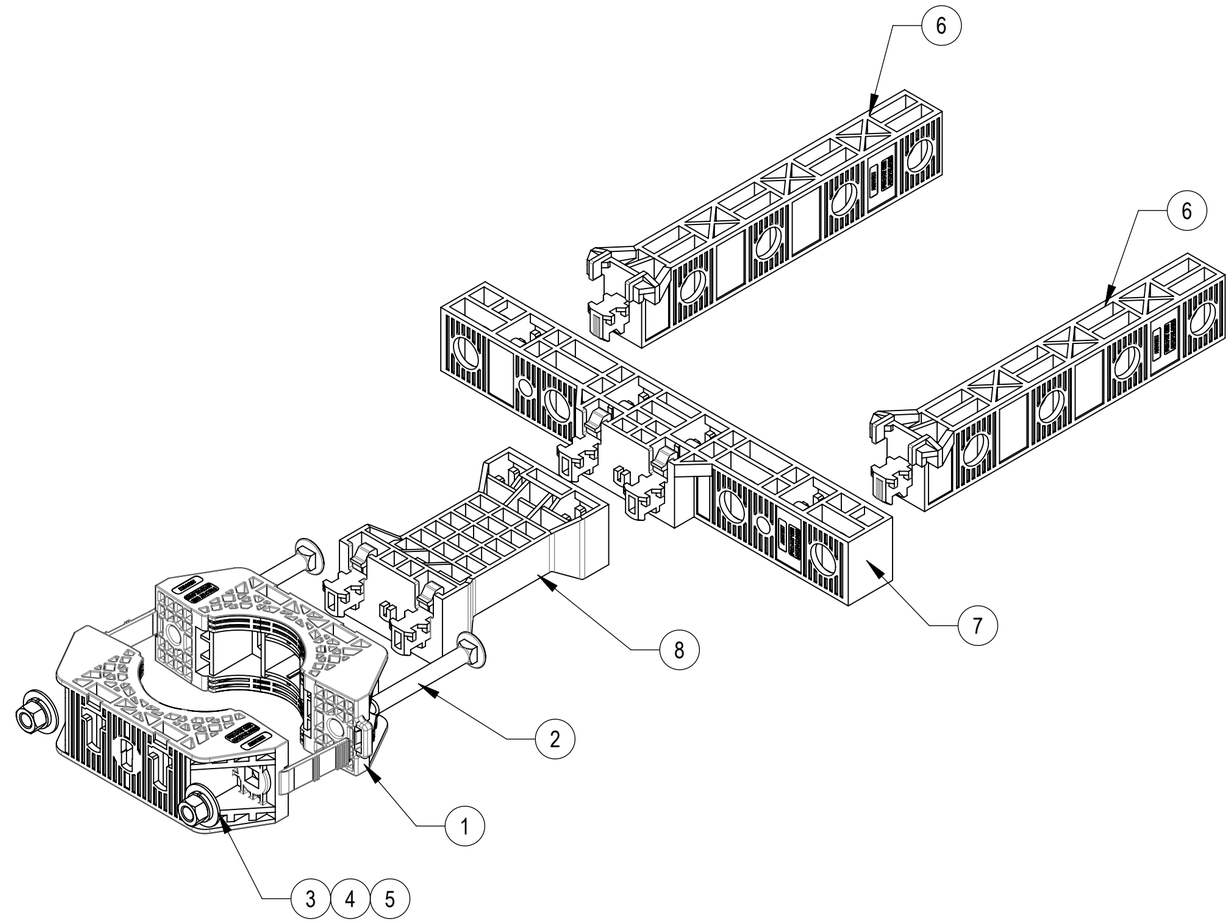

INSTALLATION ASSEMBLY

COMPONENT PART NUMBERS PROVIDED FOR ASSEMBLY PURPOSES;
INDIVIDUAL COMPONENTS MAY BE SHIPPED AS PARTS WITHIN AN INCLUDED KIT.

ITEM NO.	PART NUMBER	DESCRIPTION	QTY.	WEIGHT
1	PGCS-1000	CLAMP,FRONT-REAR, POLYMER 4CP	2	0.33 LBS
2	9615-15	BOLT,CARRIAGE,3/8-16,3,STL GALV	2	0.12 LBS
3	GWF-03	3/8" GALV FLAT WASHER	2	0.01 LBS
4	GWL-03	3/8" GALV LOCK WASHER	2	0.01 LBS
5	GN-03	3/8" GALV HEX NUT	2	0.02 LBS
6	PGCS-5000	PANEL, HALF, POLYMER, 8CP	2	0.30 LBS
7	PGCS-7000	PANEL, POLYMER, 8CP	1	0.47 LBS
8	PGCS-8000	ADAPTER, POLYMER, 4P	1	0.30 LBS

ANDREW® an Amphenol company

TOLERANCES
1 PLACE .X[.X] ± 0.2[6.3]
2 PLACE .XX[.X] ± 0.12[3.0]
3 PLACE .XXX[.X] ± 0.060[1.5]
ANGLES ± 2°

SAP MATERIAL MASTER: PGP-CS20-R

FINISH

MATERIAL: ALUMINUM 5052-H32, 0.125" THICK

UNLESS OTHERWISE SPECIFIED DIMENSIONS ARE IN INCHES INTERPRET PER ANSI Y 14.5M-1994

	NAME	DATE
CE	JL1183	14JUN24
RW	JL1183	06/11/2025
AD	JX1030	06/11/2025
RE	JL1183	06/11/2025

ECN 50103287AMO

TITLE: PG PREMIUM,CBL-SUPPORT,20-HOLE

SCALE: 1:3

DOCUMENT NO.: PGP-CS20-R

DENSITY		lbs/in³
MASS	2.12	lbs
VOLUME	50.91	in³
SURFACE AREA	867.46	in²
HEIGHT	12.3"	
LENGTH	20.2"	
WIDTH	2.1"	

SIZE: C

Auth Group: INSL

MODEL			DRAWING		
VERSION	STATUS	REVISION	VERSION	STATUS	REVISION
01	RE	B	01	RE	B

SHEET 1 OF 1

Confidential