1.0 GENERAL NOTES
- 1.1 ALL METRIC DIMENSIONS ARE IN BRACKETS [X. X]
- 1.2 FOR PATENT INFO: https://www.cs-pat.com

2.0 DESIGN NOTES
- 2.1 ANY HAZARDS OR OBSTRUCTIONS TO THE CLIMBING FACILITY AND SAFETY CLIMB MUST BE IDENTIFIED PRIOR TO INSTALLING THE APPURTENANCE. ADDITIONAL PRODUCTS MAY BE REQUIRED TO MAINTAIN THE INTEGRITY OF THE SAFETY CLIMB. DURING INSTALLATION, TEMPORARY AND/OR PERMANENT PRECAUTIONARY MEASURES SHOULD BE TAKEN TO PRESERVE THE CLIMBING FACILITY AND/OR SAFETY CLIMB.

3.0 MANUFACTURING/SPECIAL REQUIREMENTS
- 3.1 TIGHTEN ALL BOLTS SECURING FLAT PLATES BY THE TURN-OF-NUT METHOD. TIGHTEN ALL U-BOLTS USING TURN-OF-NUT METHOD WITH ATTENTION TO LEAVE EQUAL DISTANCE AND EQUAL FORCE ON EACH LEG OF THE U-BOLT.

4.0 TEST

5.0 PACKAGING
- 5.1 PACKAGING SHALL MEET COMMSCOPE REQUIREMENTS PER DOCUMENT IS-PL-3005
- 5.2 PRINTED DOCUMENT TO BE PLACED INSIDE POLYBAG AND THEN IN SHIPPING CONTAINER
- 5.3 EXTRA HARDWARE MAY BE SUPPLIED, BAGGED AND SHIPPED

REVISIONS			
REV.	DESCRIPTION	DATE	APPROVED
K	INITIAL RELEASE	YX1027 18FEB25	BA1025 50101369AMO

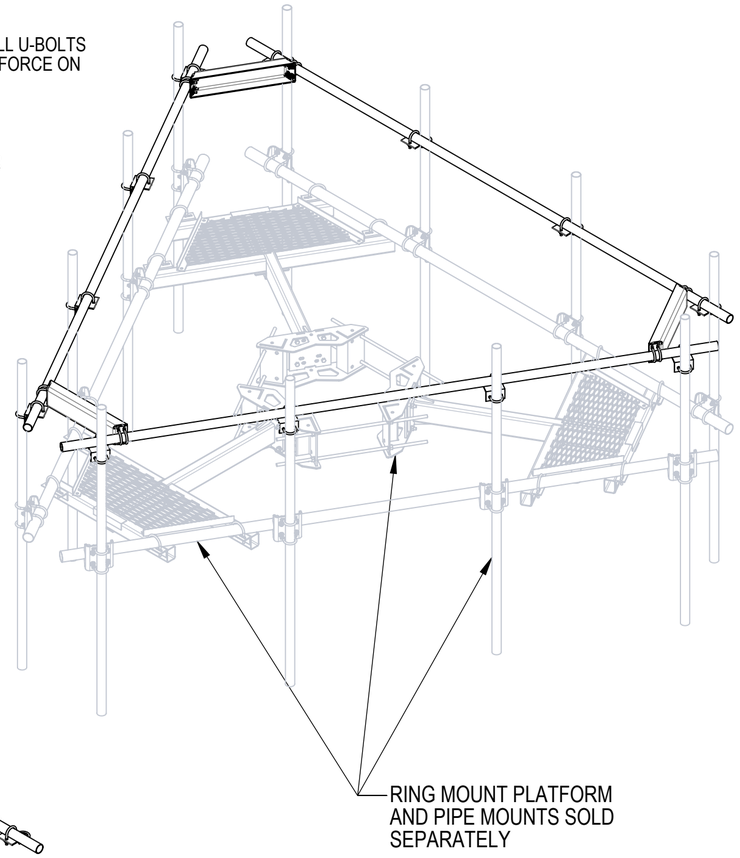

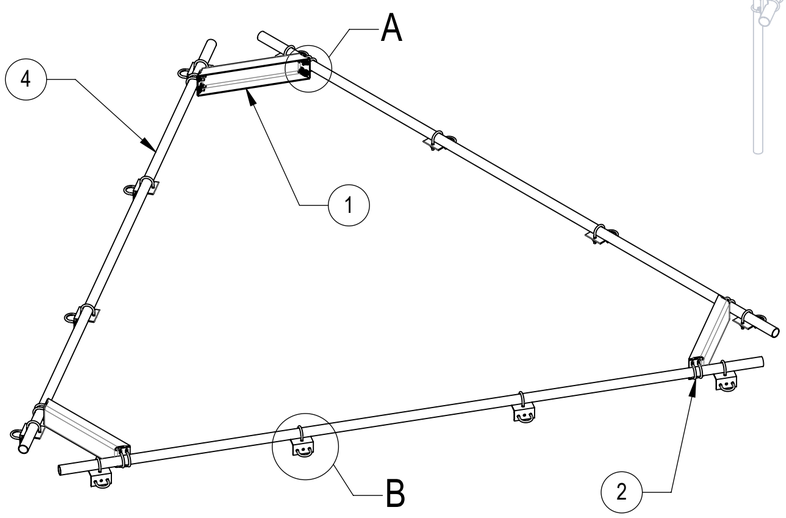

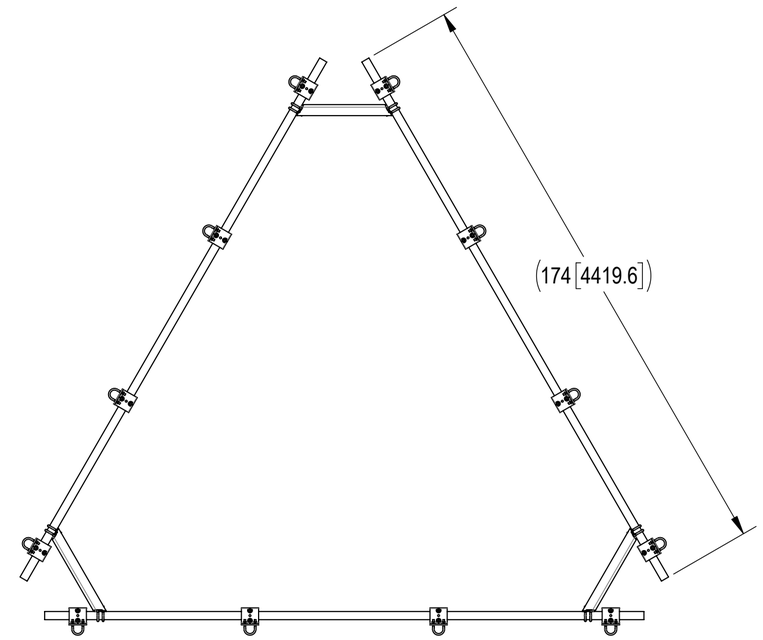

BOTTOM VIEW

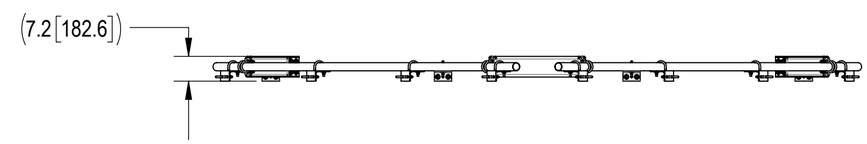

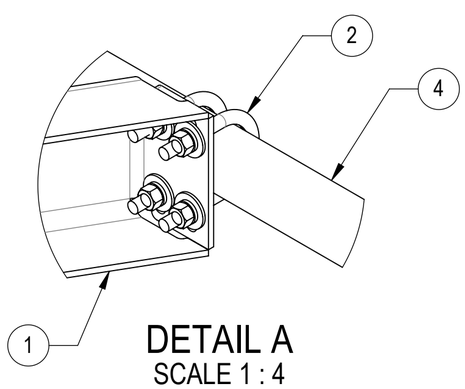

DETAIL A
SCALE 1 : 4

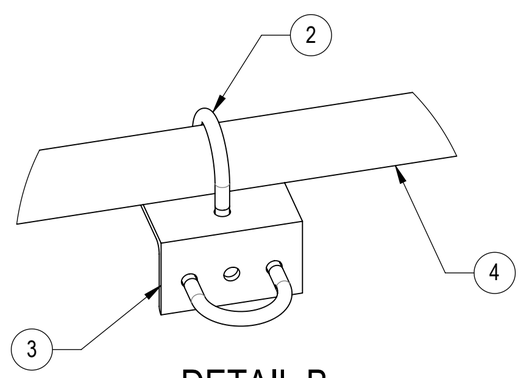

DETAIL B
SCALE 1 : 4

COMPONENT PART NUMBERS PROVIDED FOR ASSEMBLY PURPOSES;
INDIVIDUAL COMPONENTS MAY BE SHIPPED AS PARTS WITHIN AN INCLUDED KIT.

ITEM NO.	PART NUMBER	DESCRIPTION	QTY.	WEIGHT	NOTE NO.
1	MT19525	CORNER WELDMENT FOR MT-195	3	22.11 LBS	
2	GUB-4240	1/2" X 2-1/2" X 4" GALV U-BOLT	36	0.56 LBS	
3	XA202001	ANTENNA MOUNT ANGLE	12	2.65 LBS	
4	MT537174	2.375" O.D. X 174" PIPE	3	42.15 LBS	

© 2025 CommScope, Inc. Confidential

DENSITY		lbs/in³
MASS	251.55	lbs
VOLUME	888.06	in³
SURFACE AREA	11455.76	in²
HEIGHT	7.2"	
LENGTH	188.3"	
WIDTH	167.6"	

COMMSCOPE, INC. OF NORTH CAROLINA

TOLERANCES
1 PLACE .X[.X] ± .25[6.3]
2 PLACE .XX[.X] ± 0.12[3.0]
3 PLACE .XXX[.X] ± 0.06[1.5]
ANGLES ± 2°

SAP MATERIAL MASTER: MT-195-14

FINISH

MATERIAL

UNLESS OTHERWISE SPECIFIED DIMENSIONS ARE IN INCHES INTERPRET PER ANSI Y 14.5M-1994

	NAME	DATE
CE	YX1027	18FEB25
RW	YX1027	02/20/2025
RV		
AD	YMENG	02/20/2025
RE	YMENG	02/20/2025

ECN 50101369AMO

TITLE: TOP MOUNT KIT, 14' PLATFORM

SCALE 1:32

DOCUMENT NO. MT-195-14

SIZE C

WORK AREA INSL

MODEL VERSION	MODEL STATUS	MODEL REVISION	DRAWING VERSION	DRAWING STATUS	DRAWING REVISION	SHEET
02	RE	C	00	RE	K	1 OF 1