1.0 GENERAL NOTES
- 1.1 ALL METRIC DIMENSIONS ARE IN BRACKETS.
- 1.2 MARK PART WITH IDENTIFICATION NUMBER.

2.0 DESIGN NOTES
- 2.1 DESIGNED PER CUSTOMER REQUIREMENTS.

3.0 MANUFACTURING/SPECIAL REQUIREMENTS
- 3.1 TIGHTEN ALL BOLTS SECURING FLAT PLATES BY THE TURN-OF-NUT METHOD. TIGHTEN ALL U-BOLTS USING TURN-OF-NUT METHOD WITH ATTENTION TO LEAVE EQUAL DISTANCE AND EQUAL FORCE ON EACH LEG OF THE U-BOLT.

4.0 TEST

5.0 PACKAGING
- 5.1 PACKAGING SHALL MEET COMMSCOPE REQUIREMENTS PER DOCUMENT IS-PL-3005
- 5.2 PRINTED DOCUMENT TO BE PLACED INSIDE POLYBAG AND THEN IN SHIPPING CONTAINER
- 5.3 EXTRA HARDWARE MAYBE SUPPLIED, BAGGED AND SHIPPED

| REVISIONS | | | |
|---|---|---|---|
| REV. | DESCRIPTION | DATE | APPROVED |
| A | INITIAL RELEASE | RJC 07JUL20 | MC1107 8000040218 |
| B | GUB-53050 WAS GUB-53060; GB-0520A WAS GB-05205; ADDED 24X GWF-05 | YMENG 28AUG22 | BCROSS 40155504CMO |

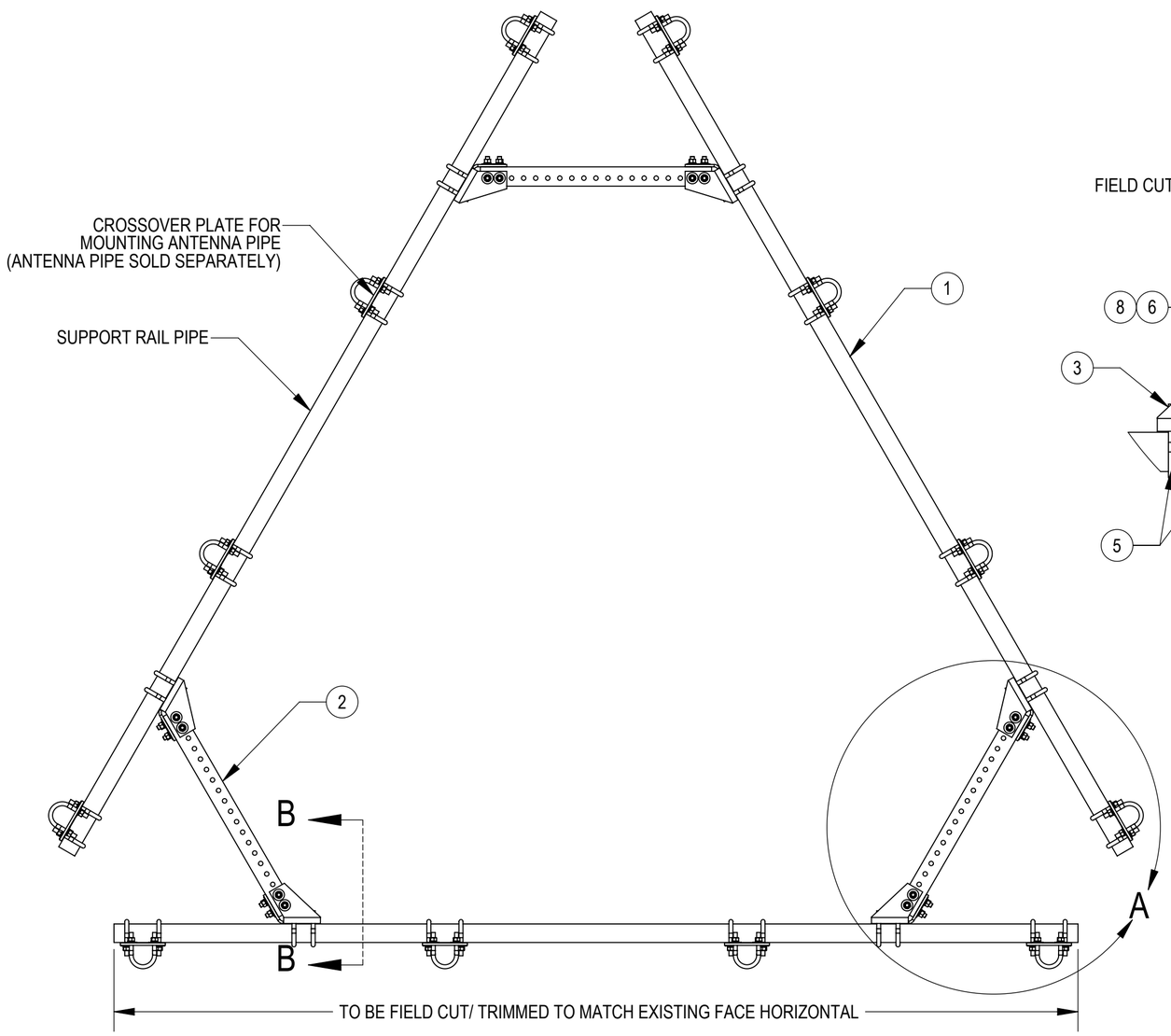


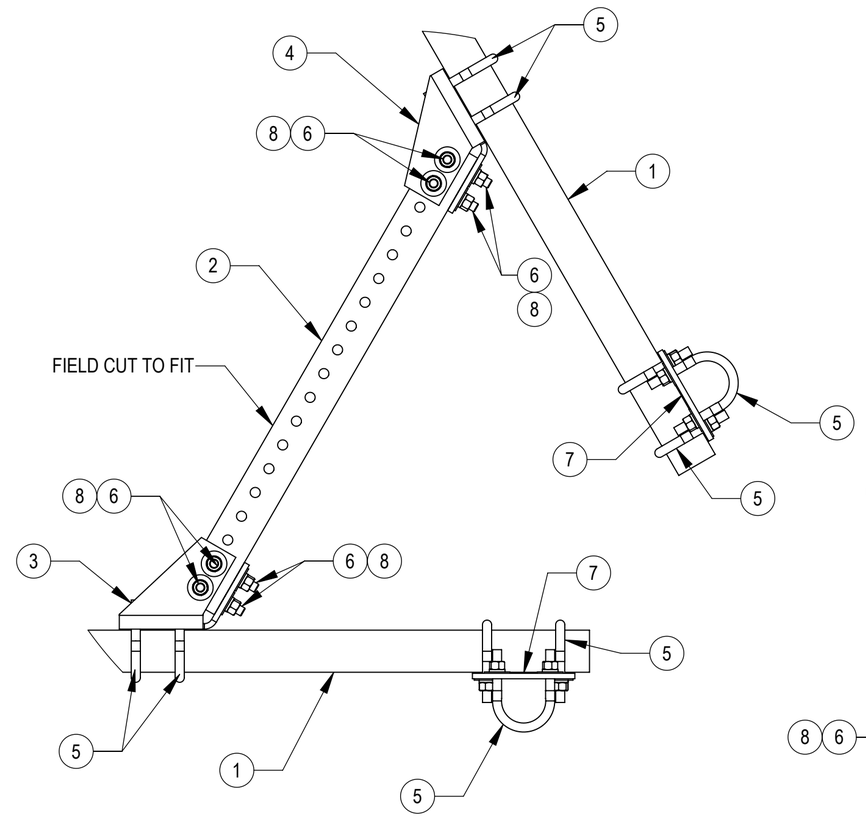


DETAIL A
SCALE 1 : 17

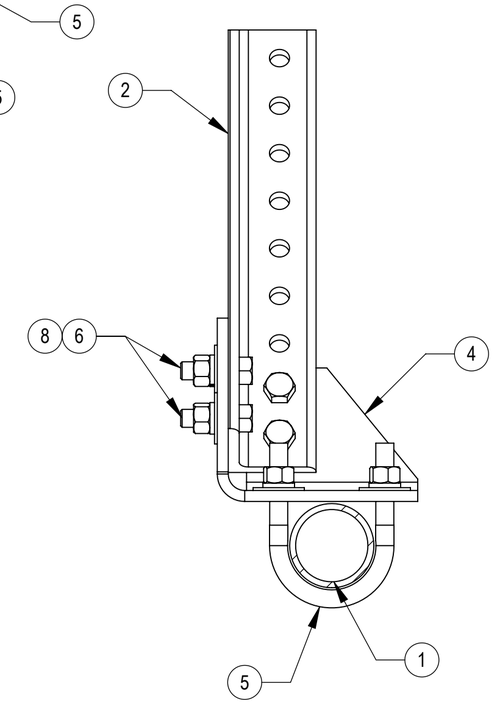


SECTION B-B

COMPONENT PART NUMBERS PROVIDED FOR ASSEMBLY PURPOSES;
INDIVIDUAL COMPONENTS MAY BE SHIPPED AS PARTS WITHIN AN INCLUDED KIT.

| ITEM | PART NO. | DESCRIPTION | QTY. | NOTE | |
|---|---|---|---|---|---|
| 1 | MT-546-150 | PIPE, 2.875"OD X 150" | 3 | | |
| 2 | PLK2-F1-30 | ANGLE, BRACE; 36.0 LG | 3 | | |
| 3 | PLK2-F2L | CORNER BENT PLATE BRACKET, LH | 3 | | |
| 4 | PLK2-F2R | CORNER BENT PLATE BRACKET, RH | 3 | | |
| 5 | GUB-53050 | 5/8" X 3" X 5" GALV U-BOLT KIT | 60 | INCLUDES U-BOLT,FLAT WASHERS, LOCK WASHERS AND NUTS | B |
| 6 | GB-0520A | 5/8" X 2" GALV BOLT KIT (A325) | 24 | INCLUDES BOLT, LOCK WASHER AND NUT | B |
| 7 | MTC4104-0030 | PLATE, CROSSOVER; 2.375 TO 2.875 OD PIPE | 12 | | |
| 8 | GWF-05 | 5/8" GALV FLAT WASHER, 1.7OD | 24 | | B |

© 2022 CommScope, Inc. Confidential

| | | |
|---|---|---|
| DENSITY | | lbs/in³ |
| MASS | 492.18 | lbs |
| VOLUME | 1749.71 | in³ |
| SURFACE AREA | 14745.19 | in² |
| HEIGHT | (170.3[4326]) | |
| LENGTH | (148.9[3781]) | |
| WIDTH | (8.5[216]) | |

COMMSCOPE, INC. OF NORTH CAROLINA

TOLERANCES
0 PLACE X[.X] ± .25[6.3]
1 PLACE .X[.X] ± 0.12[3.0]
2 PLACE .XX[.X] ± 0.06[1.5]
ANGLES ± 2°

SAP MATERIAL MASTER: VZWSMART-PLK1

FINISH

MATERIAL

UNLESS OTHERWISE SPECIFIED DIMENSIONS ARE IN INCHES INTERPRET PER ANSI Y 14.5M-1994

| | NAME | DATE |
|---|---|---|
| CE | RJC | 04/06/20 |
| RW | YMENG | 09/09/2022 |
| RV | | |
| AD | VCORTEZ1 | 09/09/2022 |
| RE | YMENG | 09/22/2022 |
| ECN | 40155504CMO | |

TITLE: SUPPORT RAIL KIT

SCALE: 1:15

DOCUMENT NO.: VZWSMART-PLK1

SIZE: C

WORK AREA: INSL

| MODEL | | | DRAWING | | | SHEET |
|---|---|---|---|---|---|---|
| VERSION | STATUS | REVISION | VERSION | STATUS | REVISION | |
| 03 | RE | B | 04 | RE | B | 1 OF 1 |